Bewegingsmelder - Professional Line

IS 2180-2

wit
EAN 4007841 603816
art.nr. 603816
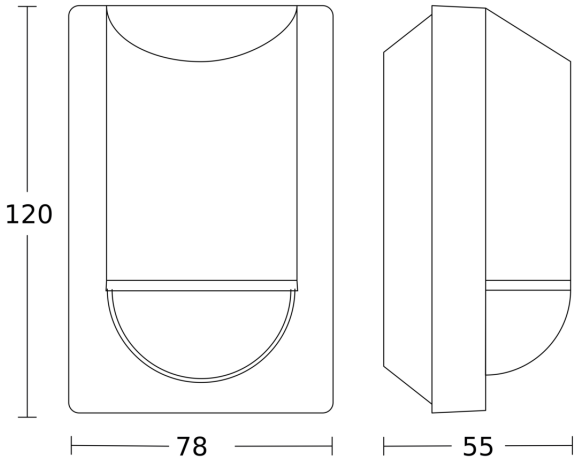
Maten